REV.	DESCRIPTION	DATE	APPROVED
A	Engineering Release	06/06/03	M. C.
B	Release for Quotation of Re-Tooling	10/14/03	M. C.
C	ECO#421, Productivity Improvement	03/25/04	M. C.
D	Removed Material Code	05/23/16	J. C.

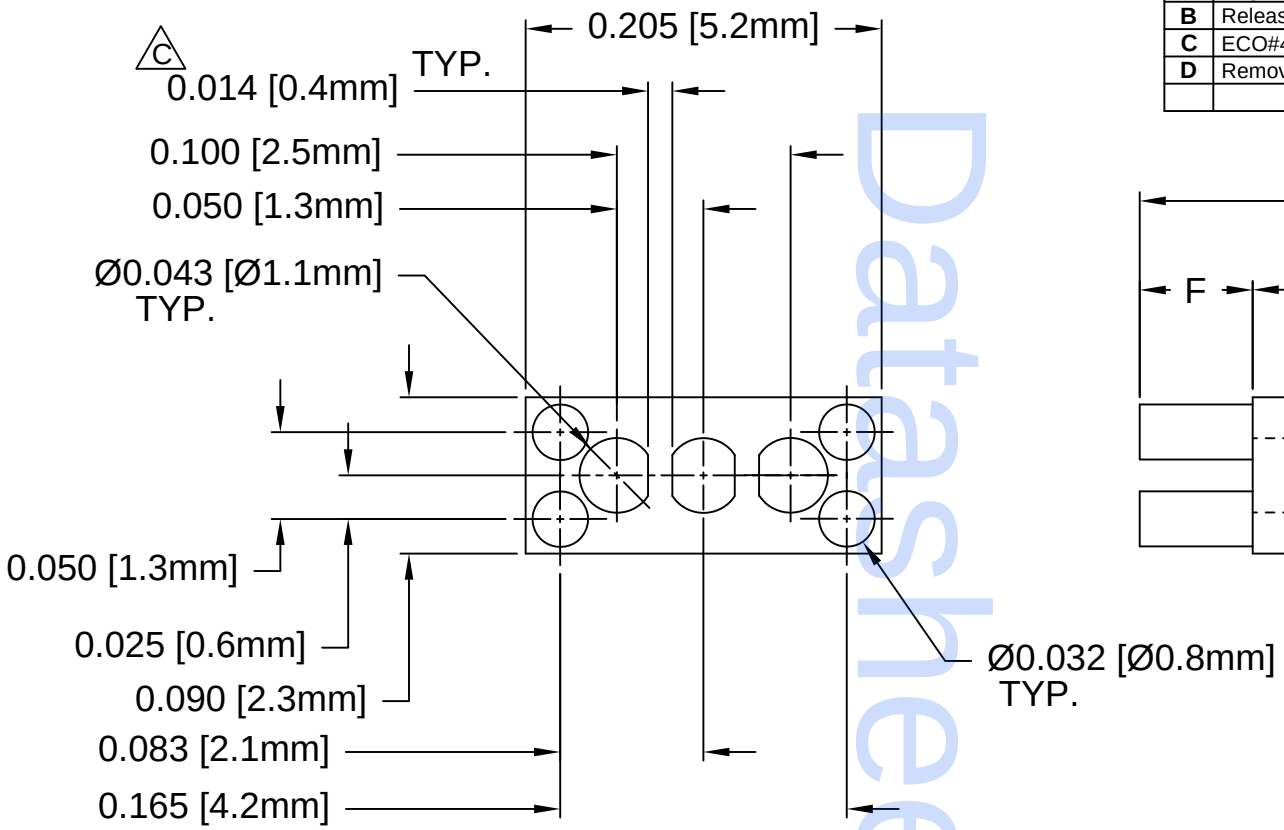

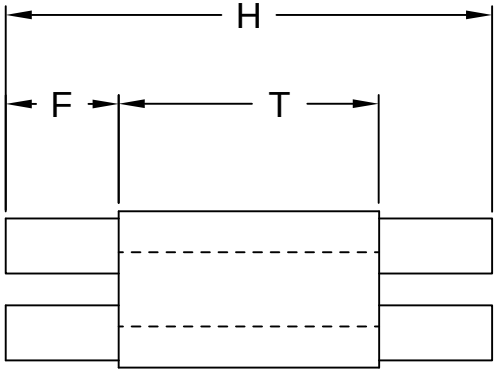

PART NO.	H	T	F
RL3-360	.360 (9.1mm)	0.340 (8.6mm)	0.010 (.25mm)
RL3-380	.380 (9.7mm)		0.020 (.51mm)
RL3-400	.400 (10.2mm)		0.030 (.76mm)
RL3-420	.420 (10.7mm)		0.040 (1.0mm)
RL3-440	.440 (11.2mm)		0.050 (1.3mm)

PART NO.	H	T	F
RL3-460	.460 (11.7mm)	0.340 (8.6mm)	0.060 (1.5mm)
RL3-480	.480 (12.2mm)		0.070 (1.8mm)
RL3-500	.500 (12.7mm)		0.080 (2.0mm)
RL3-520	.520 (13.2mm)		0.090 (2.3mm)
RL3-540	.540 (13.7mm)		0.100 (2.5mm)

2. MATERIAL: NYLON 6/6, 94V-0, WHITE.
1. GENERAL SPECIFICATIONS: BIVAR MOLDED COMPONENT SPECIFICATION BV00-E101.

STANDARD TOLERANCE
(UNLESS OTHERWISE SPECIFIED)

DECIMALS		ANGULAR	
.X	± .1	X°	± 1°
.XX	± .01		
.XXX	± .005		

BIVAR®
4 THOMAS, IRVINE, CA. 92618
TEL: (949) 951-8808 FAX: (949) 951-3974

TITLE: MOLDED RECTANGULAR LED MOUNT

DESIGNED:	DATE:	PART NO:	REVISION:
D. Green	06/06/03	RL3-XXX	D
CHECKED: M. Chen	DATE: 10/14/03	CAGE CODE : 32559	SHEET # 1 OF 1

CAD GENERATED DOCUMENT, DO NOT MEASURE DRAWING.

Datasheet-Wiki